Product data sheet

Specifications

DIN rail mount relay, Harmony Solid State Relays, 20A, zeroVoltage switching, relay configuration, input 4...32V DC, output 48...600V AC

SSD1A320BDC1

Product availability: Stock - Normally stocked in distribution facility

Main

Range of Product	Harmony Solid State Relays
Product or Component Type	Modular DIN rail relay
Device short name	SSD1
Number of channels	1
Number of phases	1 phase
Product configuration type	Relay configuration
Mounting support	35 mm symmetrical DIN rail conforming to IEC 60715
rated current	20 A
Output switching mode	Zero voltage switching

Complementary

operating frequency	47...440 Hz
Rated duty	Uninterrupted
Output voltage	48...600 V AC
control circuit voltage	4...32 V DC
Tightening torque	1.5...1.7 N.m for control input 13...15 lb.in for control input 1.5...1.7 N.m for load output 13...15 lb.in for load output
Connections - terminals	Screw terminals, clamping connection capacity:1...4 mm², AWG 18...AWG 12 for input Screw terminals, clamping connection capacity:1...6 mm², AWG 18...AWG 10 for output
Dielectric strength	4 kV AC for input/output circuit 4 kV AC for input or output to case
rated impulse withstand voltage	6 kV for input/output circuit 6 kV for input or output to case
Insulation resistance	1000 MOhm at 500 V DC
Local signalling	LED (green) for control voltage
pick-up voltage	4 V DC turn-on
drop-out voltage	1 V DC turn-off
input current range	10…15 mA
solid state switching type	Zero voltage switching
Load current	0.2…20 A

Price is “List Price” and may be subject to a trade discount – check with your local distributor or retailer for actual price.

Disclaimer: This documentation is not intended as a substitute for and is not to be used for determining suitability or reliability of these products for specific user applications

transient overvoltage	1200 V
Inrush current	300 A at 60 Hz
Maximum voltage drop	<1.3 V on-state
motor controller rating	0.37 kW/0.5 hp at 120 V AC 1.12 kW/1.5 hp at 240 V AC 2.24 kW/3 hp at 480 V AC
Electromagnetic compatibility	Electrostatic discharge 6 kV criteria A contact discharge conforming to IEC 61000-4-2 Electrostatic discharge 8 kV criteria A air discharge conforming to IEC 61000-4-2 Conducted RF disturbances 10 V, 0.15...80 MHz criteria A level 3 conforming to IEC 61000-4-6 Electrical fast transient/burst immunity test 2 kV, 5/100 kHz criteria B output ports conforming to IEC 61000-4-4 Electrical fast transient/burst immunity test 1 kV, 5/100 kHz criteria B input ports conforming to IEC 61000-4-4 Radiated radio-frequency electromagnetic field immunity test 10 V/m, 80 MHz...1 GHz criteria A conforming to IEC 61000-4-3 Radiated radio-frequency electromagnetic field immunity test 3 V/m, 1.4...2 GHz criteria A conforming to IEC 61000-4-3 Radiated radio-frequency electromagnetic field immunity test 1 V/m, 2...2.7 GHz criteria A conforming to IEC 61000-4-3 Surge immunity test 1 kV criteria A output ports line to line conforming to IEC 61000-4-5 Surge immunity test 2 kV criteria B output ports line to earth conforming to IEC 61000-4-5 Radiated emission environment B for DC input supply conforming to IEC 60947-4-3 Conducted emission environment B for DC input supply conforming to IEC 60947-4-3 Immunity to microbreaks and voltage drops 30 %, 500 ms criteria A conforming to IEC 61000-4-11 Immunity to microbreaks and voltage drops 100 %, 20 ms criteria B conforming to IEC 61000-4-11
device form designation	Form 5 semiconductor output DOL contactor
Maximum I²t for fusing	409 A².s for 10 ms 375 A².s for 8.33 ms
Maximum leakage current	1 mA off-state
DV/dt	500 V/µs off-state at maximum rated voltage
Response time	0.5 cycle (turn-on) 0.5 cycle (turn-off)
Power factor	0.5 with maximum load
short circuit protection coordination	Type 1 Type 2
Overvoltage category	III
Width	0.9 in (22.5 mm)
Height	3.8 in (95.4 mm)
Depth	4.6 in (117.1 mm)
test button	Without test button
Product Weight	0.7 lb(US) (0.3 kg)
Device presentation	Complete product

Environment

Flammability rating	V-0 conforming to UL 94
Vibration resistance	0.75 mm (f = 10…150 Hz) conforming to IEC 60068-2-6
Shock resistance	50 gn for 11 ms (peak acceleration) , longitudinal position conforming to IEC 60068-2-27 30 gn for 11 ms (peak acceleration) , vertical position conforming to IEC 60068-2-27
Pollution degree	2

Standards	IEC 61373:class B: category 1 IEC 60947-4-3 IEC 62314 IEC 60950-1 CSA C22.2 No 14-13 UL 508
IP degree of protection	IP20
Ambient air temperature for operation	-40…176 °F (-40…80 °C)
Ambient Air Temperature for Storage	-40…212 °F (-40…100 °C)

Ordering and shipping details

Category	US10CP222375
Discount Schedule	0CP2
GTIN	3606489807771
Returnability	Yes
Country of origin	US

Packing Units

Unit Type of Package 1	PCE
Nbr. of units in pkg.	1
Package 1 Height	0.984 in (2.500 cm)
Package 1 Width	3.622 in (9.200 cm)
Package 1 Length	5.512 in (14.000 cm)
Package weight(Lbs)	11.499 oz (326.000 g)
Unit Type of Package 2	S02
Number of Units in Package 2	24
Package 2 Height	5.906 in (15.000 cm)
Package 2 Width	11.811 in (30.000 cm)
Package 2 Length	15.748 in (40.000 cm)
Package 2 Weight	17.864 lb(US) (8.103 kg)

Contractual warranty

Warranty (in months)	18

Environmental Data

Schneider Electric aims to achieve Net Zero status by 2050 through supply chain partnerships, lower impact materials, and circularity via our ongoing “Use Better, Use Longer, Use Again” campaign to extend product lifetimes and recyclability.

Environmental Data explained

How we assess product sustainability

Environmental footprint

Total lifecycle Carbon footprint	**239 kg CO2 eq.**
Carbon footprint of the manufacturing phase [A1 to A3]	**4 kg CO2 eq.**
Carbon footprint of the distribution phase [A4]	**0 kg CO2 eq.**
Carbon footprint of the installation phase [A5]	**0 kg CO2 eq.**
Carbon footprint of the use phase [B2, B3, B4, B6]	**235 kg CO2 eq.**
Carbon footprint of the end-of-life phase [C1 to C4]	**0 kg CO2 eq.**

Use Better

Materials and Substances

Packaging made with recycled cardboard	**Yes**
Packaging without single use plastic	**Yes**
SCIP Number	**134201bc-d293-4667-9cca-10a7f11729e0**
EU RoHS Directive	**Compliant By Exemption**
REACh Regulation	**Reference contains Substances of Very High Concern above the threshold**
California proposition 65	**WARNING: This product can expose you to chemicals including: Lead and lead compounds, which is known to the State of California to cause cancer and birth defects or other reproductive harm. For more information go to www.P65Warnings.ca.gov**

Use Longer

Lifetime extension

Repair	**No**

Use Again

Repack and remanufacture

Take-back	**No**

Dimensions Drawings

Dimensions

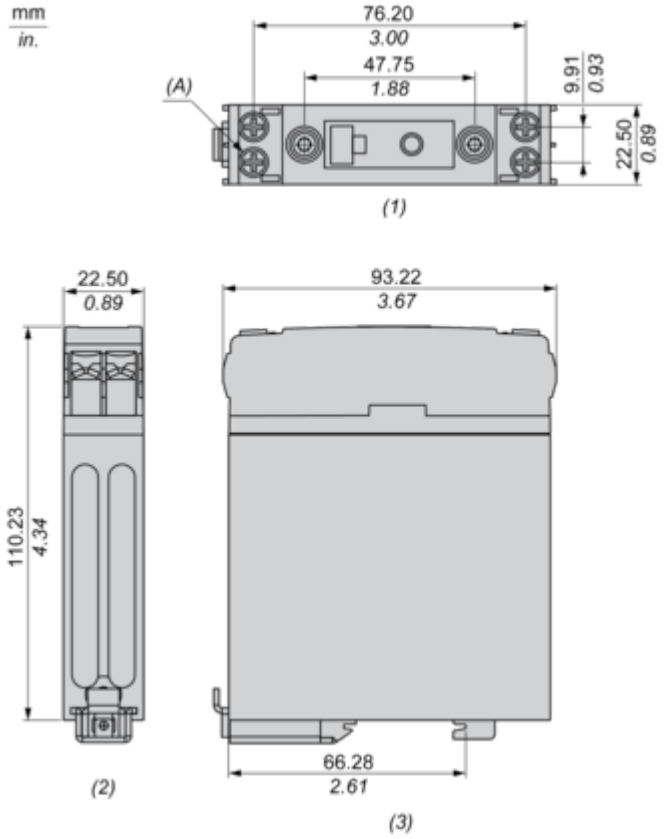

(1) Front view
(2) Top view
(3) Side view
(A) Screw M4 Stud (4 Places)

Performance Curves

Derating Curves

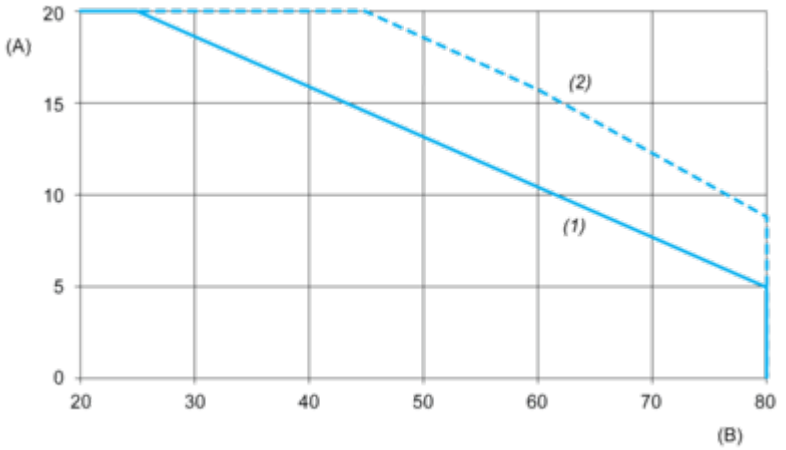

A : Load Current (Amperes)
B : Ambient Temperature (°C)
1 : Multiple units, no minimum spacing between components
2 : Installed single unit, distance to adjacent components more than 22.5 mm

Technical Illustration

Dimensions

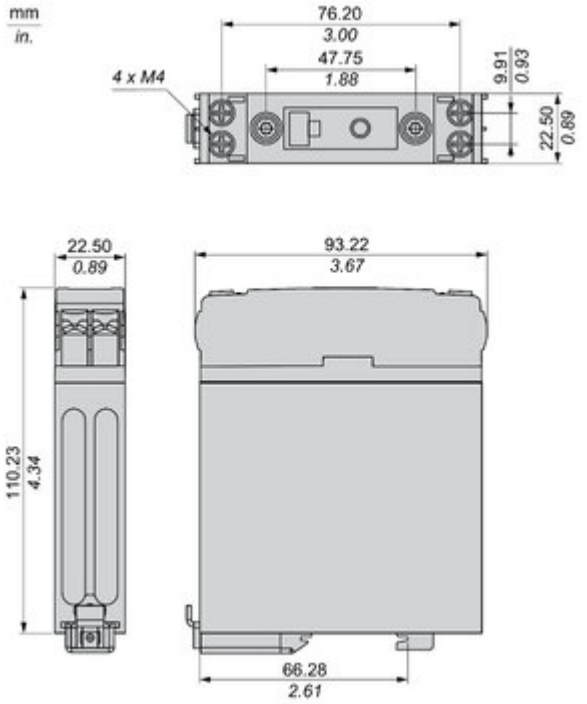

Image of product / Alternate images

Alternative

~1/L1
2/T1~
SSD1A335BDC1
Input
~3/A1
4/A2~

Input
Load Current [A]